ATC/IMRS4852310

1

M

*	HCMXB-2RS485-BD	V1.00	0.15W	RS485 Modbus RTU/ASCII

M

M

1.1

1.1.1

1.1.2

RUN STOP

*

2.2.2

24PIN	

2.2.3

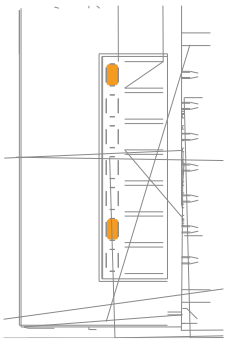

4 HCMXB-2RS485-BD

		RS485
		RS485 RS485

2.2.4

2.3

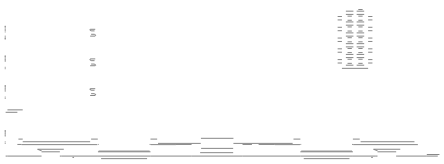

3

2.1

g		15	
mm		18.6 (W) *51.1 (H)*36.1 (D)	
		0~50	
		-25~75	
		5~95%RH	
		5~95% RH	
		1m 2	
			5 ~150 Hz
			3.5mm
			1.0g
			3

	RTU/ASCII
	32
	120Ω
	9600 bps 19200 bps 38400 bps 57600 bps 115200 bps
	7 8 8
	1

1

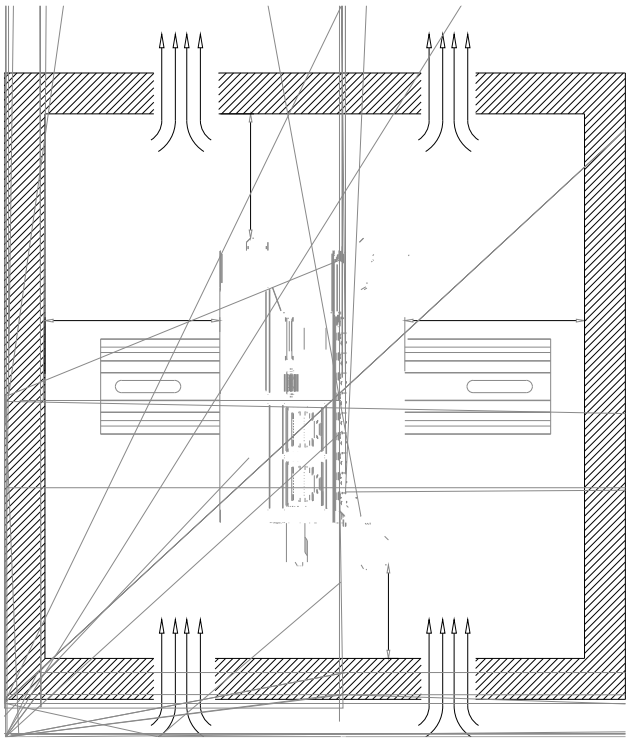

4.1.2

4.1.4

50N

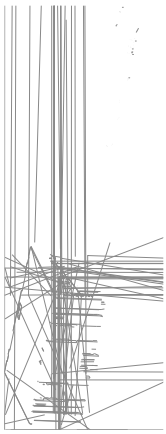

50N

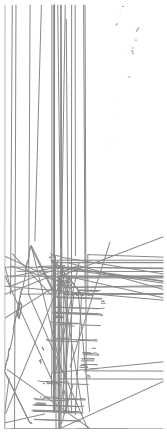

4.2.2

RS485

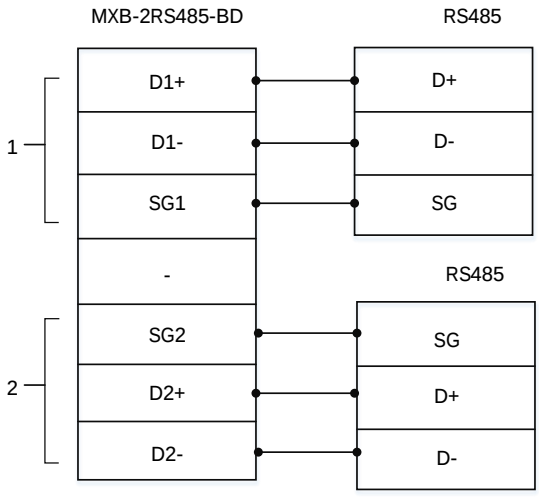

6 HCMXB-2RS485-BD

RS485 RS485 120Ω RS485

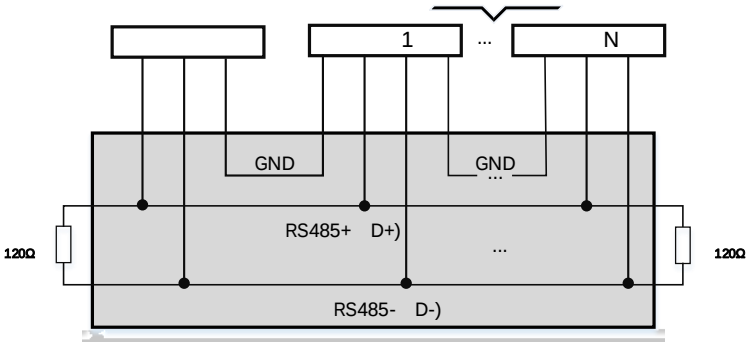

7 HCMXB-2RS485-BD

1.	RS485	120Ω	1/4
2.			
3.	RS485		

5 RS485

HCM511S

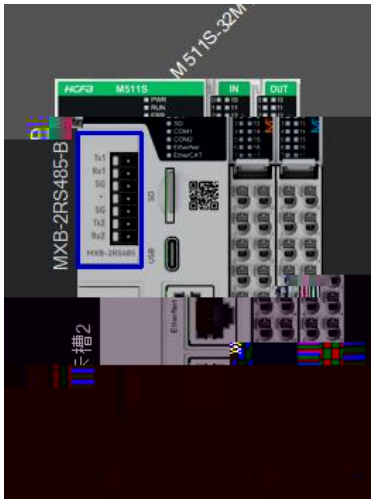

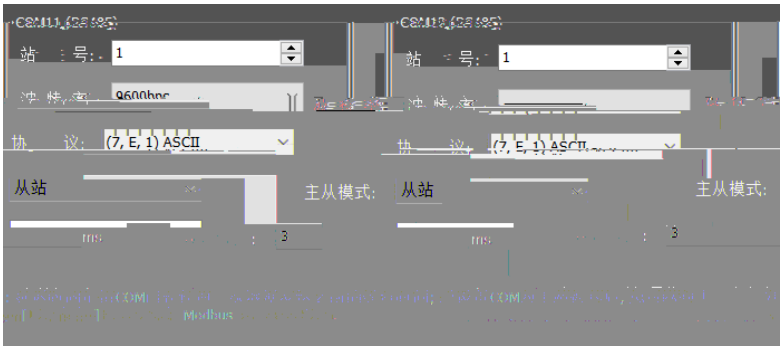

HCMXB-2RS485-BD COM 11 12 - d 6í_ÆSCÍ%C•2„ .¿C •2„ .¿GVñ uG€CWC0
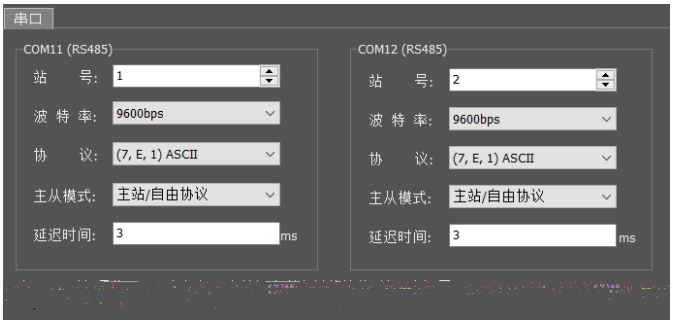
1 1~255